TWO-DIMENSIONAL GEL ELECTROPHORESIS

THE FIRST DIMENSION

This procedure has been developed for the Hoefer DE 102 series tube gel electrophoresis apparatus, which can run up to 12 tube gels at a time.

The tube gels are cast in 200 µl Clay Adams Micropets Accu-fill 90 (re-order #4624). These tubes are 1.5 mm I.D., and therefore require 1.5 mm 2nd dimension slab gels (13x13 cm).

Make a 10 cm mark on the number of tubes needed. Using a small rasp file or punch-tool, widen the tip of a 1 cc syringe so the tubes screw very tight into the tip of the syringe. It's useful to have on hand a second prepared syringe, as the acrylamide polymerizes quickly and the syringe will stretch after several uses, making them impossible to use.

Flatten and mold a piece of plasticene into a 4-6 inch long strip, approximately 1 inch in width. Place the plasticene on top of a piece of parafilm and align squarely with a test tube rack, or other small object in which a large rubber band can be wrapped around (this is only to support the tubes while they polymerize).

10 TUBE GELS (measured to 10 cm)

In a 5-10 ml beaker, add:

Urea, ultra pure	1.38 g
10% NP-40	0.5 ml
40% Ampholines	125 µl
dH_20	0.49 ml
Isofocusing Acryl	0.33 ml

Isofocusing Acryl
100 ml:

Acrylamide	28.38 g
Bis-acryl	1.62 g

Bring to 100 ml final volume in dH_20.
Filter and store refrigerated in a brown bottle.

Mix contents well using a "flea" stir bar.

Immediately before pouring gels, add:	TEMED	5 µl
	10% APS	4 µl

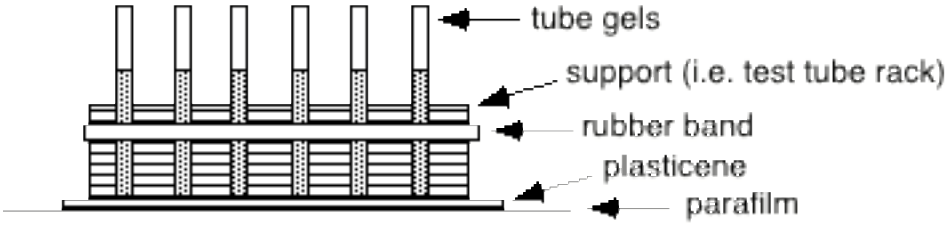

Using the 1 cc syringe, fill the pipet up to the 10 cm level. With the syringe still attached, remove the tube from the solution and pull the gel up approximately 0.5 cm beyond the mark (to avoid any loss due to dripping). Carefully slide the tube between the support and the rubber band, align the gel-level back to the 10 cm mark, and push squarely into the plasticene before removing the syringe.

When all of the tube gels have been poured, use a Hamilton syringe to overlay each one with 5-10 µl dH_2O.

Allow 2-4 hours for the gels to polymerize.

LOADING THE TUBE GELS
Prepare the isofocusing reservoir buffers:

Upper reservoir buffer: 0.02 M NaOH

10 N NaOH	1.2 ml
dH_2O	600 ml

Lower reservoir buffer: 0.01 M H_3PO_4

H_3PO_4	0.75 ml
dH_2O	1102.5 ml

Fill the *lower* reservoir chamber approximately two-thirds full with buffer.

Remove the tube gels from the plasticene--trying to avoid forming a plasticene plug in the bottom (it sometimes helps if the tubes are removed by gently "unscrewing" them out). Remove any plasticene adhering to the bottom of the tubes using a very small/sharp forceps or needle. Select only good tubes to use--avoiding any that have leaked or contain air bubbles in the acrylamide.

Wipe each tube with a wet Kim-wipe and "flick" the tube to remove the dH_2O overlay.

Carefully push the tubes down through the pin-hole in the rubber inserts to approximately 1.5-2 inches from the top of the apparatus.
Fill a 10 cc syringe (with an 18 gage needle) with lower reservoir buffer and squirt into the space

in the bottom of each tube to get rid of air bubbles. Place the isofocusing unit into the lower buffer chamber. Check each tube for the appearance of an air bubble--which must be removed by squirting more buffer into it. It is important to remove all air bubbles.

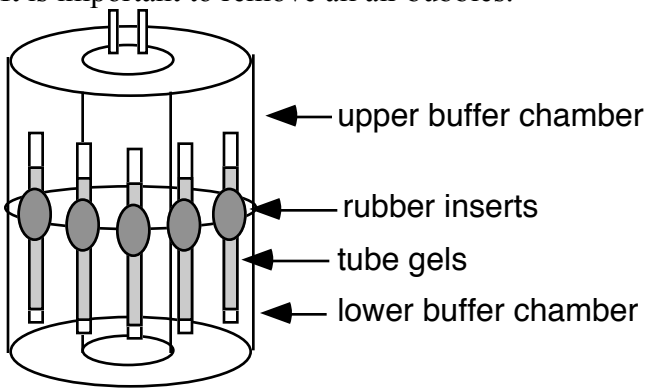

If less than 12 tube gels are going to be run, fill the remaining rubber inserts with "blanks"--unusable poured gels or empty tubes (which must be placed above the level of the upper buffer--approx. 1 inch from the top). It is important that *all 12* rubber inserts contain a tube to ensure that no upper buffer can leak into the lower chamber.
When all air bubbles have been removed and all rubber inserts filled, add the entire volume of upper reservoir buffer to the upper chamber. It's a good idea to place a mark at the upper buffer level to monitor for possible leakage into the lower chamber.

The samples can be loaded using a 50 µl Hamilton syringe. For 10 cm tube gels, the volume of sample cannot exceed 25 µl.

When all samples are loaded, overlay each sample with 2-4 µl isofocusing overlay.

<u>Isofocusing Overlay</u>

Urea, ultra pure	3.6 g	
40 % Ampholines	100 µl	(use the same pH as used for gels)
0.1 % Brom. Blue	400 µl	

Bring to 10 ml final volume in dH_2O.
Store at -20°C indefinitely.

Run the gels at 300V constant voltage for 14.5 hr.

Following this, the voltage should be increased to 800V constant voltage for 2.5 hours.

The tube gels can be extracted after the 17 hour run.

<u>NOTE</u>:
The isofocusing dyes will separate within a few minutes of applying current--check each gel for separation to make sure there is no problem (ie. an air bubble present).

Since these gels are usually run overnight, it's recommended to pour the resolving portion of the 2nd dimension slab gel a day in advance. As these gels can take quite a long time to polymerize and sometimes leak, it's much more convenient to have them ready to pour the stacker and load the 2nd dimension just prior to use.

THE SECOND DIMENSION:

Prepare the second dimension SDS/PAGE gel.

The following materials and volumes are for the Bio-Rad Multi-Gel and Hoefer SE600 units but can be altered for other systems.

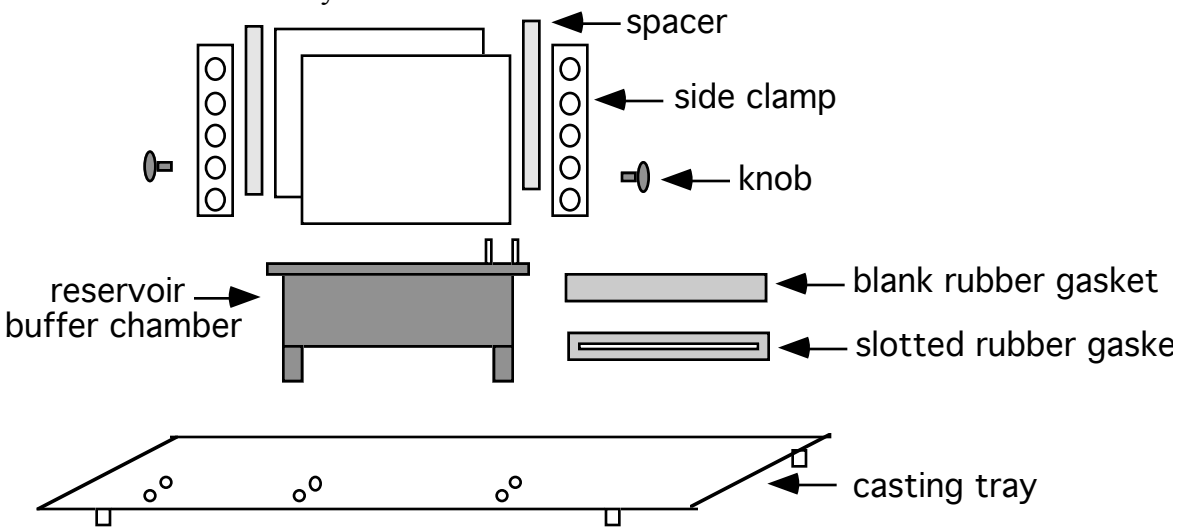

Materials needed:

-casting stand
-reservoir buffer chamber
-glass plates (18 x 16 cm)
-spacers (1.5 mm)
-slotted silicone rubber gasket
-blank silicone rubber gasket
-side clamps
-parafilm (18 x 10 cm, folded in half lengthwise)
-knobs to tighten the clamps into the buffer chamber

Set reservoir buffer chamber inverted on the casting tray.

Place blank silicone rubber gasket into the grooves along buffer chamber. Place folded parafilm on top of the gasket.

Clean glass plates with EtOH. Carefully inspect the plates to make sure they are perfectly clean and are free of chips and cracks along the edges. This is important to ensure that the gels will not leak.

Set spacers along the 16 cm sides of a clean plate and place the other clean plate on top of this. Center the spacers so they are perfectly flush with both the top and bottom edges of the plates.

Carefully center and attach side clamps on to plates. Tighten until snug.
Double check to make sure clamps and spacers are perfectly flush with the top and bottom of plates. This is especially important along the bottom edge of the plates.

Set plates on gel stand (inverted upper reservoir chamber). Place tightening knobs into the side holes of the stand and turn 180°C to tighten the plates into place.

Place a mark on the plates to designate gel volumes:
-for the resolving gel, place a mark 3.0 cm from the top of the plate.
-for the stacking gel for 2-dimensional gel, place a mark approximately 0.3-0.4 cm from the top of the plate.

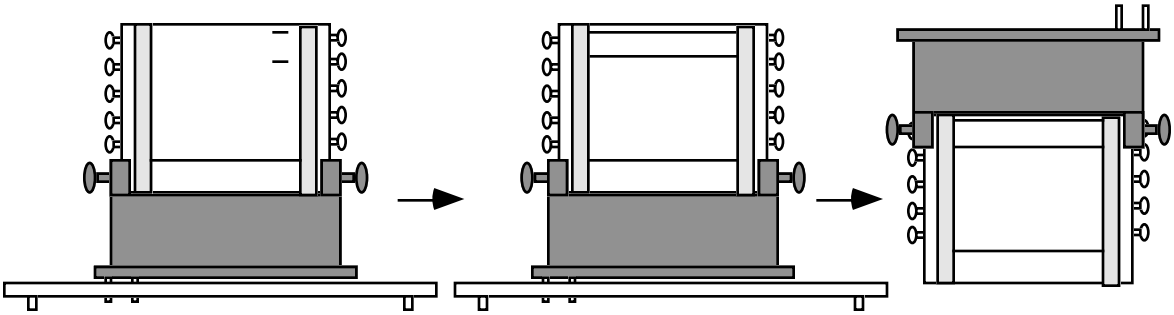

The Second Dimension Resolving Gels:

Laemmli Resolving 10% Gel					
# of gels:	1	2	4	6	8
11A	6.2 ml	12.4 ml	24.7 ml	37.1 ml	49.6 ml
Resolv. Acryl.	12.5 ml	25.0 ml	50.0 ml	75.0 ml	100.0 ml
20% SDS	0.94 ml	1.9 ml	3.8 ml	5.64 ml	7.52 ml
dH_2O	17.8 ml	35.6 ml	71.2 ml	106.8 ml	142.4 ml

10% APS: 40 µl/gel or 20 mg/gel
TEMED: 15 µl/gel

Laemmli Stacking Gel					
# of gels:	1	2	4	6	8
11B	1.25 ml	2.5 ml	5.0 ml	7.5 ml	10.0 ml
Resolv. Acryl.	0.5 ml	1.0 ml	2.0 ml	3.0 ml	4.0 ml

20% SDS	125 µl	250 µl	500 µl	750 µl	1.0 ml
dH_2O	3.12 ml	6.25 ml	12.5 ml	18.75 ml	24.96 ml

10% APS: 12.5 µl/gel or 6 mg/gel
TEMED: 5 µl/gel

NOTE:
-For the 2-D stacking gels , prepare enough for 1.5x as many gels needed (the extra volume is necessary because a comb will not be used).
-Pour stacking gel to 0.5-0.3 cm from the top of the plate.
Carefully overlay with dH_2O.

To change buffer in Hoefer and Bio-Rad 16-liter gel tanks:

Rinse units out well with dH_2O.
Add 14 liters dH_2O (from the still).
Add: 1600 ml 10x reservoir buffer
80 ml 20% SDS
320 ml dH_2O (to bring final volume to 16 liters)

The buffer in these tanks will be fine for several gels, but should be changed if it appears to be quite old, contains any foreign material, or if gels are taking too long to run.

Once the stacking gel has polymerized, pour off water overlay and attach the upper reservoir buffer chamber (lined with slotted rubber gaskets). Again, use the tightening knobs to secure the unit.
*If only one gel is being run, the "blank" plate must be used to plug the other open slot in the upper reservoir chamber. Place a blank rubber gasket along the groove in the upper reservoir chamber and attach the "blank" plate using the tightening knobs.

THE SECOND DIMENSION

Extruding the Tube Gels:

The tube gels are extruded using a prepared 10 cc syringe--fitted to hold the micropipet very tightly--with the rubber portion set at the 10 cc mark. It is helpful to flick off the buffer from the top of the tube and wipe the tube dry to ensure a snug fit onto the syringe. Again, it may be useful to prepare a second syringe.

In a hood, gently extrude each tube gel into separate tubes *on ice* containing:

95% Sample buffer: 4.75 ml
ß-mercaptoethanol 0.25 ml

(At this point, the tubes can be frozen at -20°C indefinitely.)

95% Sample Buffer (w/o ß-mercaptoethanol)

1 liter:

Soln. 11B (tris pH 6.7)	126.8 ml
glycerol	100.0 g
0.1 % Bromophenol blue	100.0 ml
20% SDS	100.0 ml

-bring to a final volume of 950 ml with dH_2O.

Immediately before use, add ß-mercaptoethanol to a final concentration of 5%.

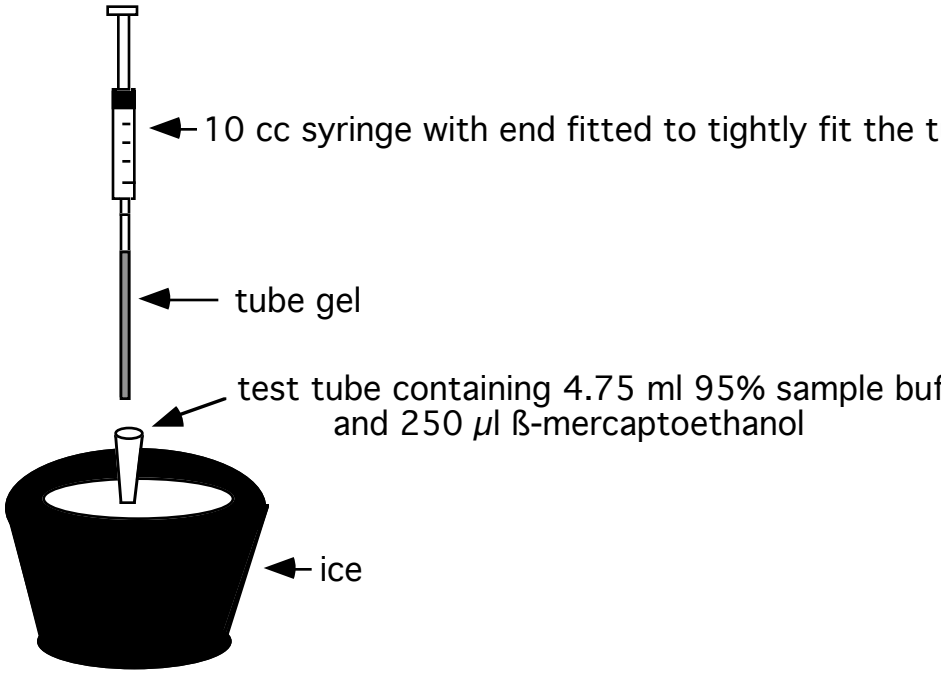

Prepare loading gel:

1% agarose in 95% sample buffer (w/v)

One 10 ml tube/2 gels

In a culture tube, add:	agarose	0.1 g
	95% sample buffer	9.5 ml

Bring tubes to a boil and continue to boil until ready to use.

*Add 500 µl ß-mercaptoethanol (in the hood) immediately before use.

In a hood, have prepared:

-an additional layer of bench paper
-the slab gels to be loaded (the second dimension)
-the isofocusing gels in 95% sample buffer/ß-mer (on ice)
-the place-mat to pour the tube gels onto
-blunt-end forceps
-a small container to pour the excess sample buffer into
-ß-mercaptoethanol

-pasteur pipets with a rubber bulb
-a p-1000 (set at 500 µl) and blue-tips
-a generous supply of paper towels
-*one 10 ml tube of boiling loading gel (only immediately before use)

Pour tube containing tube gel onto placemat and, using a blunt-end forceps, align straight along the edge (any excess sample buffer can be poured off into container for waste).

*Remove a tube of loading gel from the boiling water and add 500 µl ß-mercaptoethanol. Using a pasteur pipet, mix well, and add a layer of loading gel to the top of the stacking gel to make it flush with the top of the slotted rubber gasket.

Carefully load the tube gel into the open slit of the rubber gasket. Using the blunt-end forceps, guide the tube gel into place. Avoid trapping air bubbles beneath the tube gel. Overlay the tube gel with another layer of 1% loading gel.

Quickly prepare the next tube gel onto the placemat and add a layer of loading gel to the second stacking gel. Load the tube gel as before.

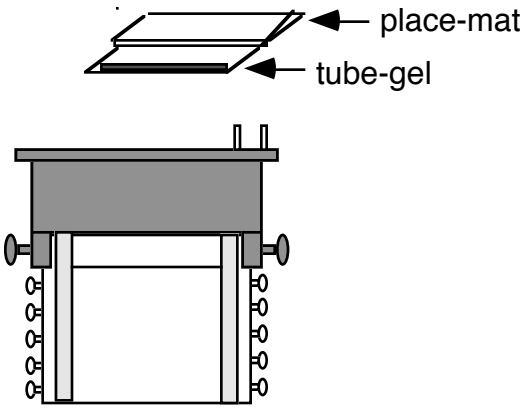

IT IS IMPORTANT TO MOVE QUICKLY ONCE THE LOADING GEL IS REMOVED FROM THE BOILING WATER because the gel will solidify in a few minutes.

After all tube gels have been loaded, let them sit for a few minutes to ensure that the loading gel has solidified completely.

Carefully add 700-750 ml of 1X reservoir buffer with 5 ml/liter 20% SDS to each upper buffer chamber.

Run gels at 80 volts (constant voltage) through the stacking gel. The voltage can then be increased as not to exceed 200 mAmp (the limit of the Buchler power supplies). Typically, the gels are run until the dye front reaches the bottom of the plates. For better separation, the gels can be run at 200-300 volts for one hour beyond this.

At the completion of electrophoresis, if gels are for:

-*Western blotting:* transfer immediately. *Then*, if desired, the gels can be stained.

-*Fluorography:* place gels in destain at least one hour, then proceed with fluorography protocol.

-*Coomassie stain:* place no more than 2 gels into a container (roughly 20 x 20 cm) containing approximately 300 ml stain and place on rotating platform for at least 2 hours. Pour off stain and add approximately 300 ml destain. Allow to shake on rotating platform 1-2 hours or until background is clear.